# ECOHiLUX照明器具　配光データシート

| | | | |
|---|---|---|---|
| 品名 | ラインルクス | 保守率 | |
| セット品番 | LX175F－28WW－UK40－W240 | 良 | 0.81 |
| 器具品名 | 埋込型 | 中 | 0.77 |
| 器具品番 | LXBF－UK40－W240 | 否 | 0.68 |
| 器具光束 | 2850lm | 器具効率 | |
| 光源 | LXU175F－29WW－40S | 上方向 | 0% |
| 光源光束 | 2940lm | 下方向 | 100% |
| 光源光束 | 2940lm | 全方向 | 100% |

## 意匠図

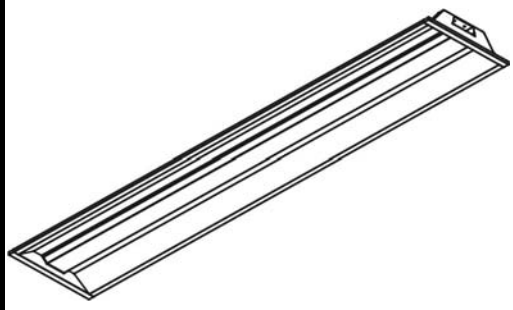

## 照明率表

| 作業面照明率(×0.01) | | | | | | | | | | | | | | | | | | | | | | | | |
|---|---|---|---|---|---|---|---|---|---|---|---|---|---|---|---|---|---|---|---|---|---|---|---|---|
| 反射率 | 天井 | 80 | | | | | | | 70 | | | | | | | 50 | | | | | 30 | | | 0 |
| | 壁 | 70 | | 50 | | 30 | | 10 | 70 | | 50 | | 30 | | 10 | 50 | | 30 | | 10 | 30 | | 10 | 0 |
| | 床 | 30 | 10 | 30 | 10 | 30 | 10 | 10 | 30 | 10 | 30 | 10 | 30 | 10 | 10 | 30 | 10 | 30 | 10 | 10 | 30 | 10 | 10 | 0 |
| 室指数 | 0.4 | 45 | 43 | 32 | 31 | 25 | 24 | 20 | 44 | 42 | 32 | 30 | 24 | 24 | 20 | 31 | 30 | 24 | 24 | 19 | 24 | 23 | 19 | 18 |
| | 0.6 | 63 | 58 | 48 | 46 | 39 | 38 | 33 | 61 | 56 | 47 | 45 | 39 | 38 | 33 | 46 | 44 | 38 | 37 | 33 | 38 | 37 | 33 | 31 |
| | 0.8 | 73 | 66 | 58 | 54 | 48 | 46 | 41 | 71 | 65 | 57 | 54 | 48 | 46 | 41 | 55 | 52 | 47 | 45 | 40 | 46 | 45 | 40 | 38 |
| | 1 | 82 | 73 | 67 | 62 | 57 | 55 | 49 | 79 | 72 | 66 | 62 | 57 | 54 | 48 | 63 | 60 | 55 | 53 | 48 | 54 | 52 | 48 | 46 |
| | 1.25 | 90 | 80 | 77 | 70 | 67 | 63 | 57 | 87 | 78 | 75 | 69 | 66 | 62 | 57 | 72 | 68 | 64 | 61 | 56 | 62 | 60 | 56 | 54 |
| | 1.5 | 95 | 84 | 82 | 75 | 73 | 68 | 62 | 92 | 82 | 80 | 74 | 72 | 67 | 62 | 77 | 72 | 69 | 66 | 61 | 67 | 65 | 61 | 58 |
| | 2 | 103 | 90 | 92 | 82 | 83 | 76 | 71 | 99 | 88 | 89 | 81 | 82 | 75 | 70 | 85 | 79 | 78 | 74 | 70 | 76 | 73 | 69 | 66 |
| | 2.5 | 108 | 94 | 99 | 87 | 91 | 82 | 77 | 105 | 92 | 96 | 86 | 89 | 81 | 77 | 91 | 84 | 85 | 80 | 76 | 82 | 78 | 75 | 72 |
| | 3 | 112 | 96 | 103 | 90 | 96 | 86 | 81 | 108 | 94 | 100 | 89 | 94 | 85 | 81 | 95 | 87 | 89 | 83 | 80 | 86 | 82 | 79 | 76 |
| | 4 | 116 | 99 | 109 | 95 | 103 | 91 | 87 | 112 | 98 | 106 | 94 | 101 | 90 | 87 | 100 | 91 | 95 | 88 | 85 | 91 | 87 | 84 | 82 |
| | 5 | 119 | 101 | 113 | 97 | 108 | 94 | 91 | 115 | 100 | 110 | 96 | 105 | 93 | 91 | 103 | 94 | 100 | 92 | 89 | 94 | 90 | 88 | 85 |
| | 7 | 123 | 103 | 118 | 101 | 114 | 98 | 96 | 118 | 102 | 114 | 99 | 111 | 97 | 95 | 107 | 97 | 104 | 95 | 93 | 99 | 93 | 92 | 89 |
| | 10 | 125 | 105 | 122 | 103 | 119 | 101 | 100 | 121 | 103 | 118 | 102 | 115 | 100 | 99 | 110 | 100 | 108 | 98 | 97 | 102 | 96 | 95 | 92 |

## 配光曲線

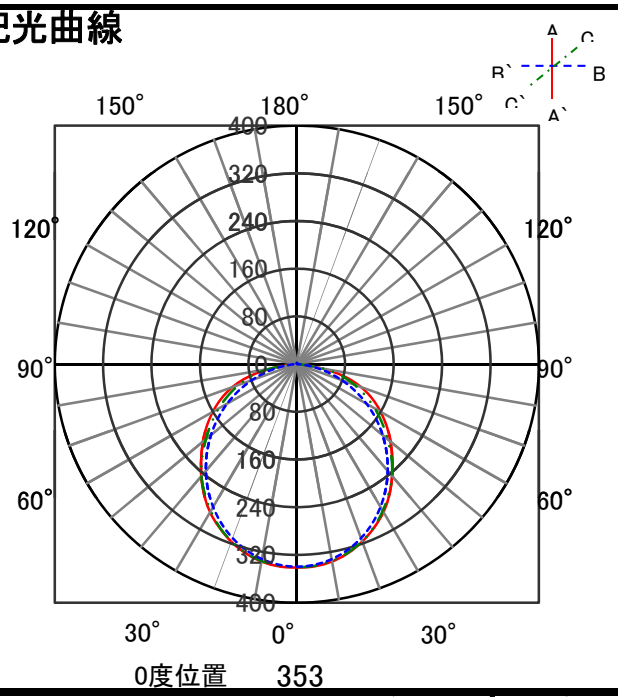


0度位置　353
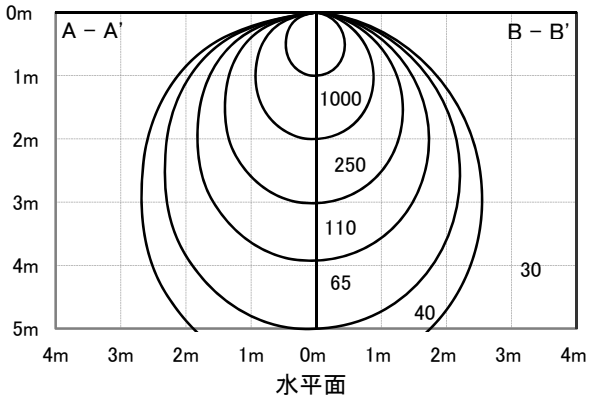
## 直射水平面照度